Internal Construction of Thumbwheel Shown in del20029

Mount Diodes on Thumbwheel

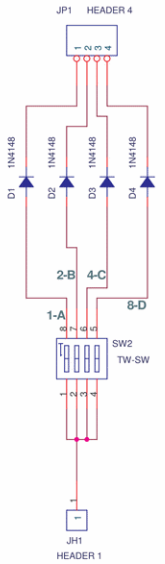

This Flashes the Display on-off at 1K Hz rate.
This way display driver resistors for LEDs are ommited.

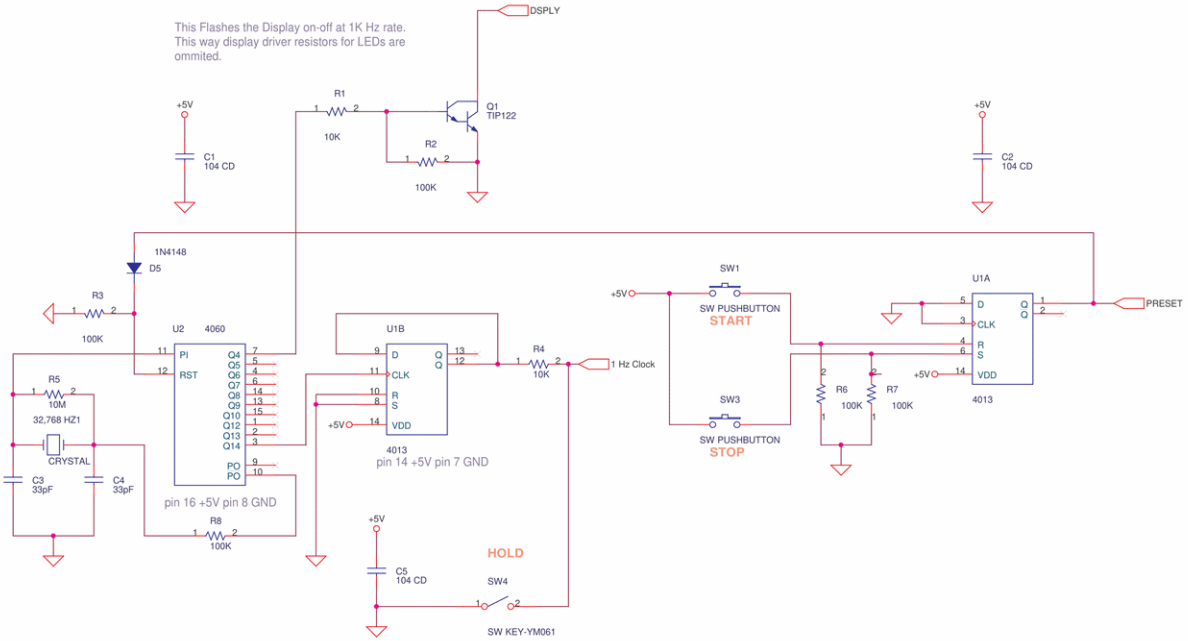

use 74HCT40XX chips in place of CD40XX for only 5V and high speed designs. Use Shrink sleeves and proper gauge of wire.
put 104 CD cap for all ICs from positive to negative close to IC, even if ommited in circuit, for opamps on dual supply two caps.
unused inputs of logic and opamps pull up or down to avoid oscillations and noise. connect supply of all chips if not mentioned.
"analog ground" and "digital ground" must be linked at power supply only, avoid loops, let grounds radiate from a ground plane.
use MFR 1% for all Resistors, 33E means 33 ohms, 22K means 22 kilo ohms, 1M is 1 megohm. 10T tp means ten turn trimpot.
'474 CD' is 47 with 4 zeros pF, 470000 pF, 470 nF, 0.47uF, ceramic disc. "pl" is plastic, low leakage multilayer.

delabs

delabs design
delabs-circuits.com
delabs.net

delabs circuits and technologies			
Title	1 Hz or 1 pps crystal clock		
Size B	Document Number del20030		Rev 1
Date: Tuesday, December 14, 2004	Sheet 1 of 1		